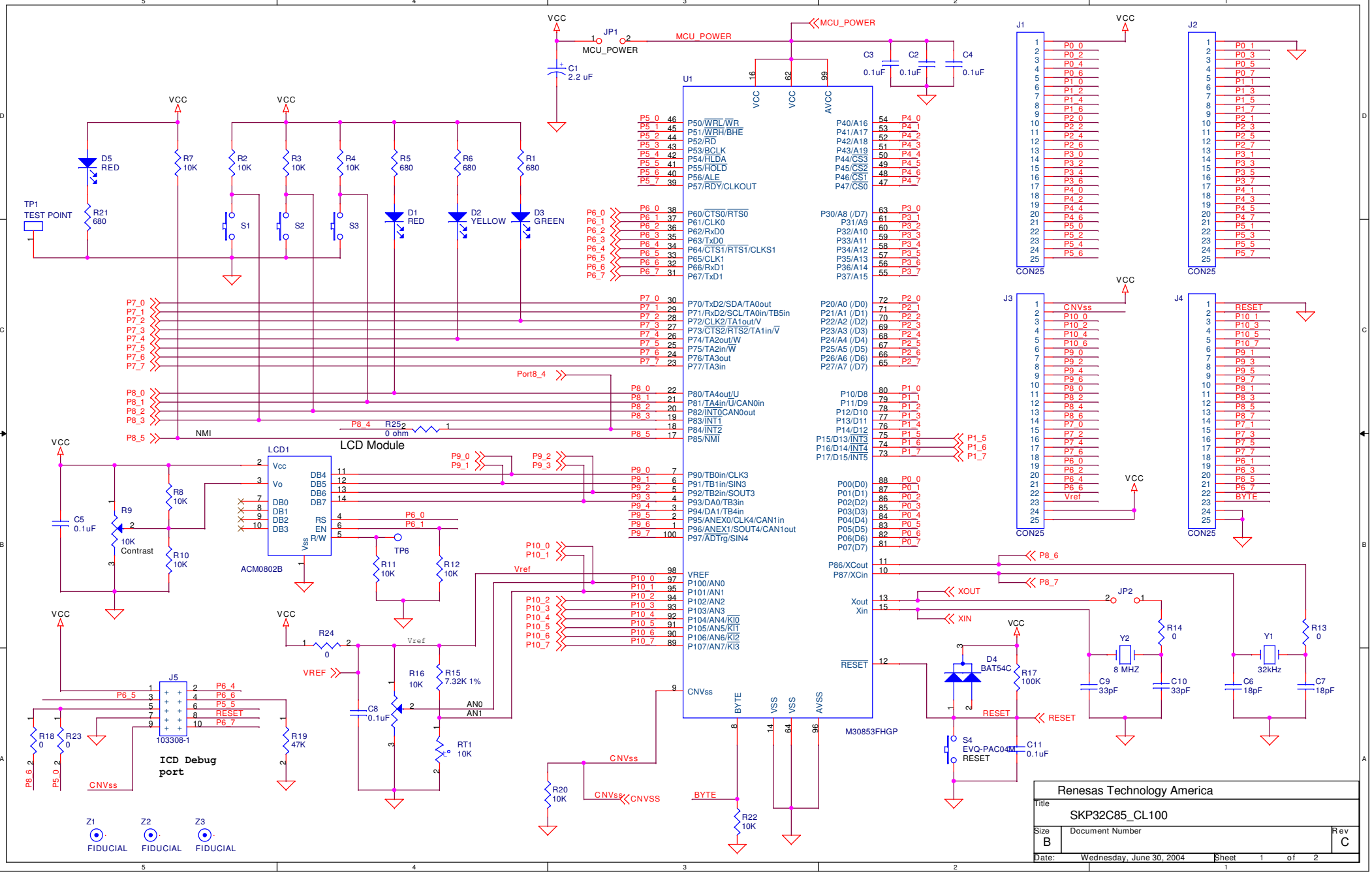
VCC
JP1
MCU_POWER
C1
2.2 uF
C3
0.1uF
C2
0.1uF
C4
0.1uF
U1
M30853FHGP
D5
RED
R7
10K
R2
10K
R3
10K
R4
10K
R5
680
R6
680
R1
680
TP1
TEST POINT
R21
680
S1
S2
S3
D1
RED
D2
YELLOW
D3
GREEN
NMI
R25
0 ohm
LCD Module
LCD1
ACM0802B
R8
10K
R9
10K
Contrast
R10
10K
C5
0.1uF
TP6
R11
10K
R12
10K
R24
0
VREF
R16
10K
R15
7.32K 1%
C8
0.1uF
RT1
10K
R19
47K
J5
103308-1
ICD Debug port
R18
0
R23
0
CNVss
R20
10K
CNVSS
BYTE
R22
10K
Z1
FIDUCIAL
Z2
FIDUCIAL
Z3
FIDUCIAL
J1
CON25
J2
CON25
J3
CON25
J4
CON25
XOUT
XIN
JP2
Y2
8 MHZ
C9
33pF
C10
33pF
R14
0
Y1
32kHz
C6
18pF
C7
18pF
R13
0
D4
BAT54C
R17
100K
S4
EVQ-PAC04M
RESET
C11
0.1uF
Renesas Technology America
Title
SKP32C85_CL100
Size
B
Document Number
Rev
C
Date: Wednesday, June 30, 2004
Sheet 1 of 2