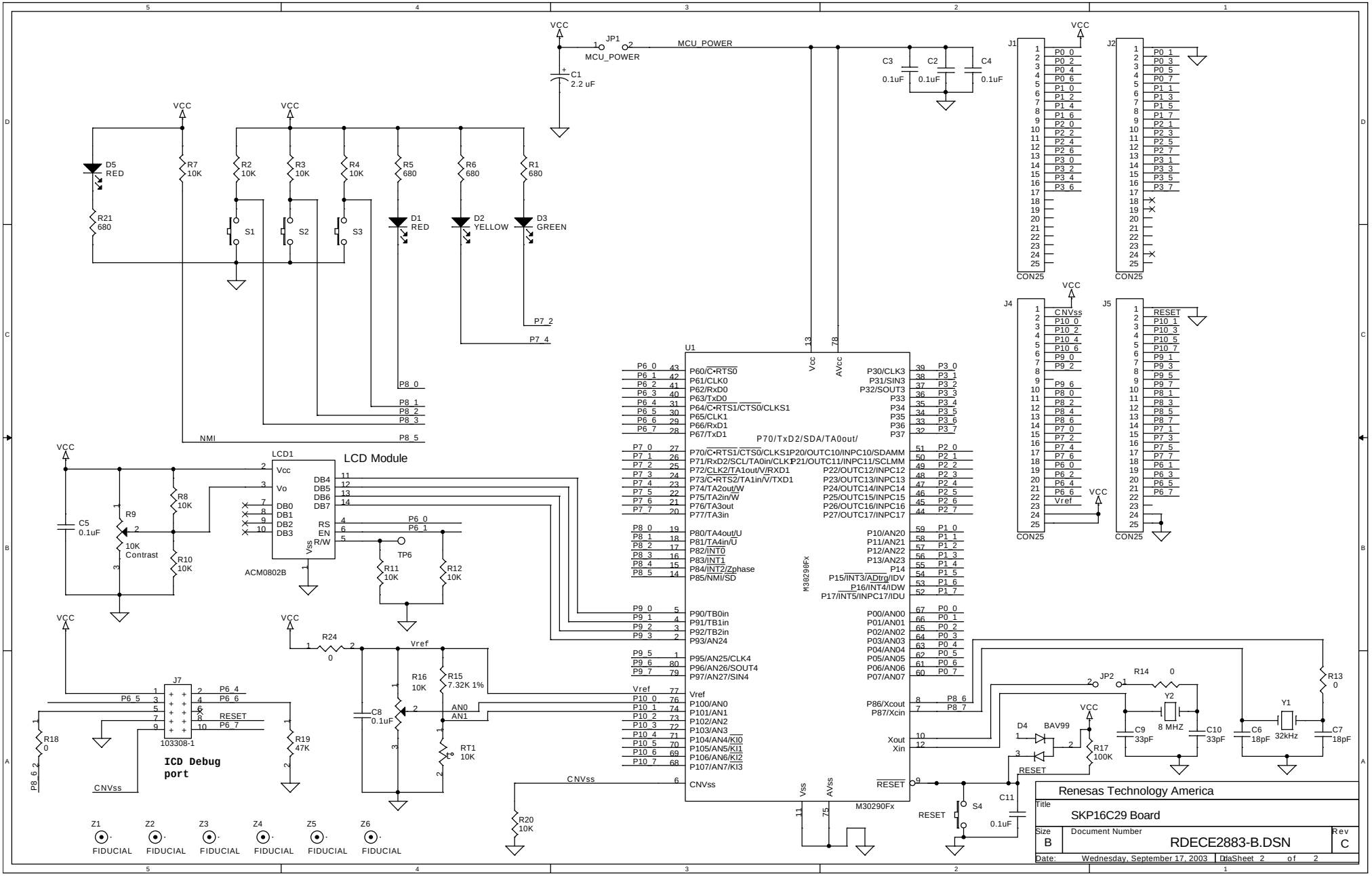
VCC
JP1
MCU_POWER
C1
2.2 uF
C3
0.1uF
C2
0.1uF
C4
0.1uF
J1
J2
CON25
D5
RED
R7
10K
R2
10K
R3
10K
R4
10K
R5
680
R6
680
R1
680
R21
680
S1
S2
S3
D1
RED
D2
YELLOW
D3
GREEN
P7_2
P7_4
P8_0
P8_1
P8_2
P8_3
P8_5
NMI
U1
M30290Fx
J4
J5
LCD1
LCD Module
ACM0802B
C5
0.1uF
R9
10K
Contrast
R8
10K
R10
10K
R11
10K
R12
10K
TP6
R24
0
Vref
R16
10K
R15
7.32K 1%
C8
0.1uF
RT1
10K
AN0
AN1
J7
103308-1
ICD Debug
port
R18
0
R19
47K
CNVss
R20
10K
Z1
Z2
Z3
Z4
Z5
Z6
FIDUCIAL
JP2
R14
0
Y2
8 MHZ
C9
33pF
C10
33pF
Y1
32kHz
C6
18pF
C7
18pF
R13
0
D4
BAV99
R17
100K
RESET
S4
C11
0.1uF
Renesas Technology America
Title
SKP16C29 Board
Size
B
Document Number
RDECE2883-B.DSN
Rev
C
Date: Wednesday, September 17, 2003
Sheet 2 of 2